Instantaneous Nonlocal Measurements

Li Yu

Department of Physics, Carnegie-Mellon University, Pittsburgh, PA

July 22, 2010

References

- Entanglement consumption of instantaneous nonlocal quantum measurements.
  S.R. Clark, A.J. Connor, D. Jaksch, S. Popescu.
  arXiv:1004.0865v1
- Instantaneous measurement of non-local variables.
  L. Vaidman, Phys. Rev. Lett. **90**, 010402 (2003).
- Measurements of semi-local and non-maximally entangled states.
  B. Groisman, B. Reznik, Phys. Rev. A **66**, 022110 (2002).

Structure of the talk

- Definition of problem.
- Motivations.
- Simple schemes on two qubits.
- The Vaidman scheme. (using teleportation)
- Finite entanglement consumption scheme. (better use of teleportation)

Definition of instantaneous nonlocal measurements

- Bipartite nonlocal quantum measurement: a measurement of a Hermitian observable on a bipartite system. The final state might be disturbed (destroyed or altered), i.e. might not be one of the eigenstates.
- Special case: state verification (verifies if the state was $|\Psi\rangle$). Probability of "yes" is given by $|\langle\Psi|\eta\rangle|^2$, where $|\eta\rangle$ is an arbitrary initial state. Corresponds to a coarse-grained measurement. The final state could be disturbed.
- "Instantaneous" means no classical communication is allowed except at classical postprocessing. Both parties perform local operations using shared entanglement, and then the local measurement outcomes are sent to a third party C to recover the result of the nonlocal measurement.

Motivations

- Understanding quantum mechanics: nonlocal variables as observables.
- Understanding the relationship between classical and quantum nonlocal correlations.
- Time as a resource. Applications in “fast” protocols for nonlocal unitaries.

The nonlocal unitary related to a nonlocal measurement

- For any nonlocal observable O, there is a (nonlocal) unitary U that maps the eigenstates of the observable O to a product basis.
- The U corresponding to a Bell measurement is the CNOT gate (up to local unitaries).
- A nonlocal measurement protocol in general corresponds to a quantum channel on AB followed by local measurements on A,B, so it could use less entanglement than the entanglement cost of U.

Instantaneous nonlocal Bell measurement

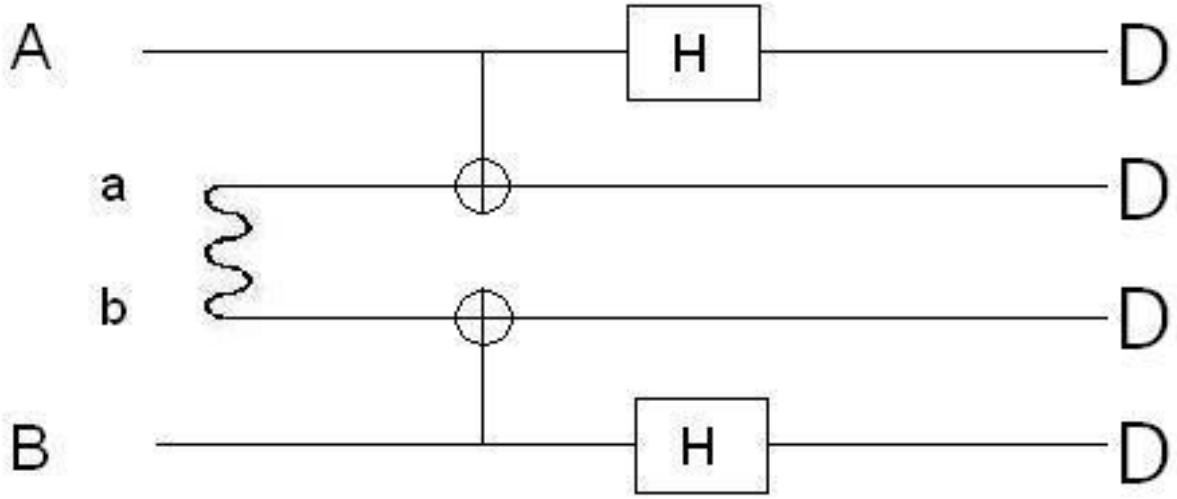

Figure: Instantaneous nonlocal Bell measurement protocol that uses 1 ebit. Result is in the correlations between the local measurement outcomes.

Instantaneous measurement of any two-qubit observable

- Groisman and Reznik, Phys. Rev. A **66**, 022110 (2002). arXiv:quant-ph/0111102v2
- The case of controlled-Hadamard gates. Needs 1 ebit.
- The case of general controlled gates.
- More general cases.

The Vaidman scheme

- Works for any observable. Based on the idea of sending the system back and forth using partial teleportation (without sending local measurement outcomes).
- Step 1: Bob teleports his system to Alice. She applies U to the combined system that transforms the eigenstates of the observable to the product Z basis.
- Step 2: Alice then teleports the combined system back to Bob. If Bob's previous measurement outcome $n = 1$, he measures in the standard basis and terminates. Otherwise, he teleports the combined system to Alice using a copy of the entangled ancilla dependent on the value of n.
- Step 3: Alice then does a different unitary on each copy that corrects U using the information about n and her previous measurement result k. Go to step 2. The process terminates when Bob's previous measurement outcome was 1.

The Vaidman scheme: simplest case

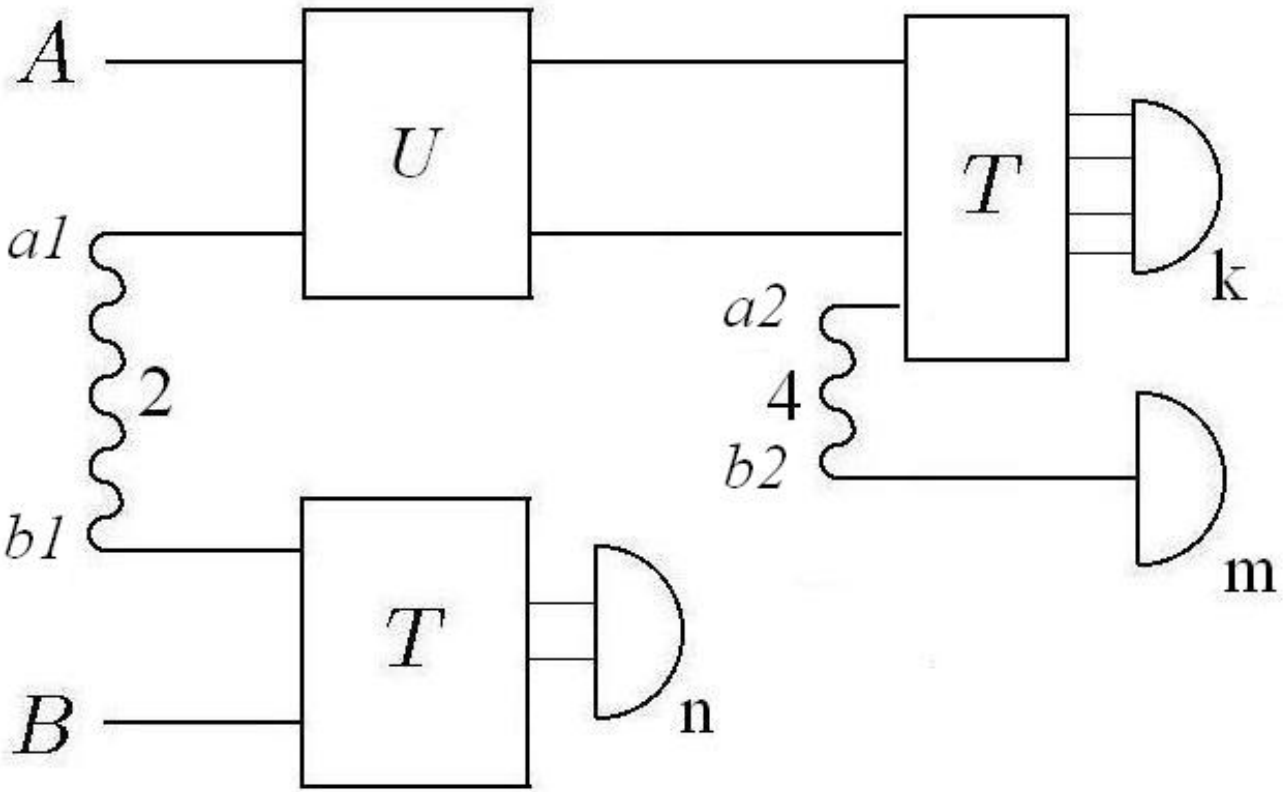

Figure: The case $n = 1$ in Vaidman's protocol (on two qubits). T denotes the gates in teleportation.

The Vaidman scheme: more complex cases

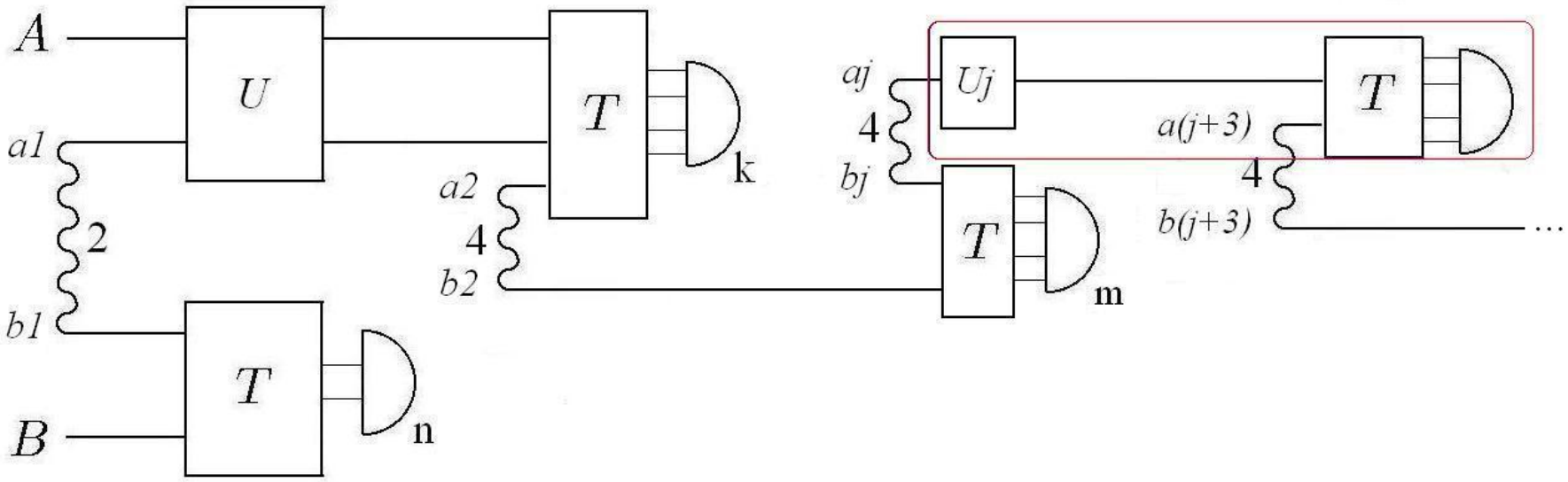

Figure: The cases $n \in \{2, 3, 4\}$ in Vaidman's protocol (on two qubits). Bob only teleports using the entangled ancilla labeled by $j = n + 1$, but Alice performs the operation in the red box for each $j \in \{3, 4, 5\}$. $U_j \vec{\sigma}_k U \sigma_n = U$.

The Vaidman scheme: discussions

- Bob terminates when he gets measurement result 1 (no correction needed for teleportation). Alice has no termination condition. Thus the worst-case entanglement cost is unbounded.
- If we allow Alice to terminate after M rounds, and denote the corresponding probability of failure by q, then the entanglement cost is exponential in M, but is a polynomial function of $1/q$. For two-qubit measurements, the entanglement cost $\sim 15^M \simeq 10^{-6} \cdot (1/q)^{42}$, e.g. $\sim 10^{16}$ ebits for $q = 0.3$, and $\sim 10^{36}$ ebits for $q = 0.1$.
- The case that each party has d qubits is similar. The protocol can be generalized to any number of parties.

Finite consumption scheme

- Main idea: for the unitary U that maps the eigenstates of the observable to the product Z basis, decompose it into one or two-qubit Pauli rotation gates.
- Pauli rotation: $R_{\mathbf{j}}(\theta) = \exp(-i\theta\sigma_{\mathbf{j}}/2) = \cos(\theta/2)\mathbb{I} - i\sin(\theta/2)\sigma_{\mathbf{j}}$, where $\sigma_{\mathbf{j}}$ is a tensor product of one-qubit Pauli operators.
- Basic component of the protocol: Pauli rotation chain that implements $R_{\mathbf{j}}(\theta)$. The chain consists of a sequence of teleportation channels in which the entire system is teleported back and forth.

Finite consumption scheme – two-qubit gate example 1

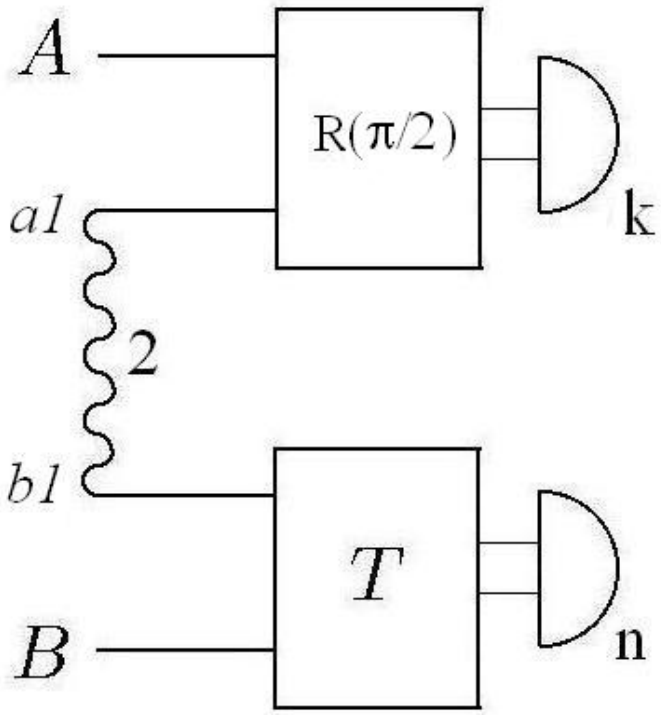

Figure: Instantaneous measurement with $U = R(\pi/2) = \exp(-i\frac{\pi}{4}\sigma_x \otimes \sigma_x)$.

Finite consumption scheme – two-qubit gate example 2

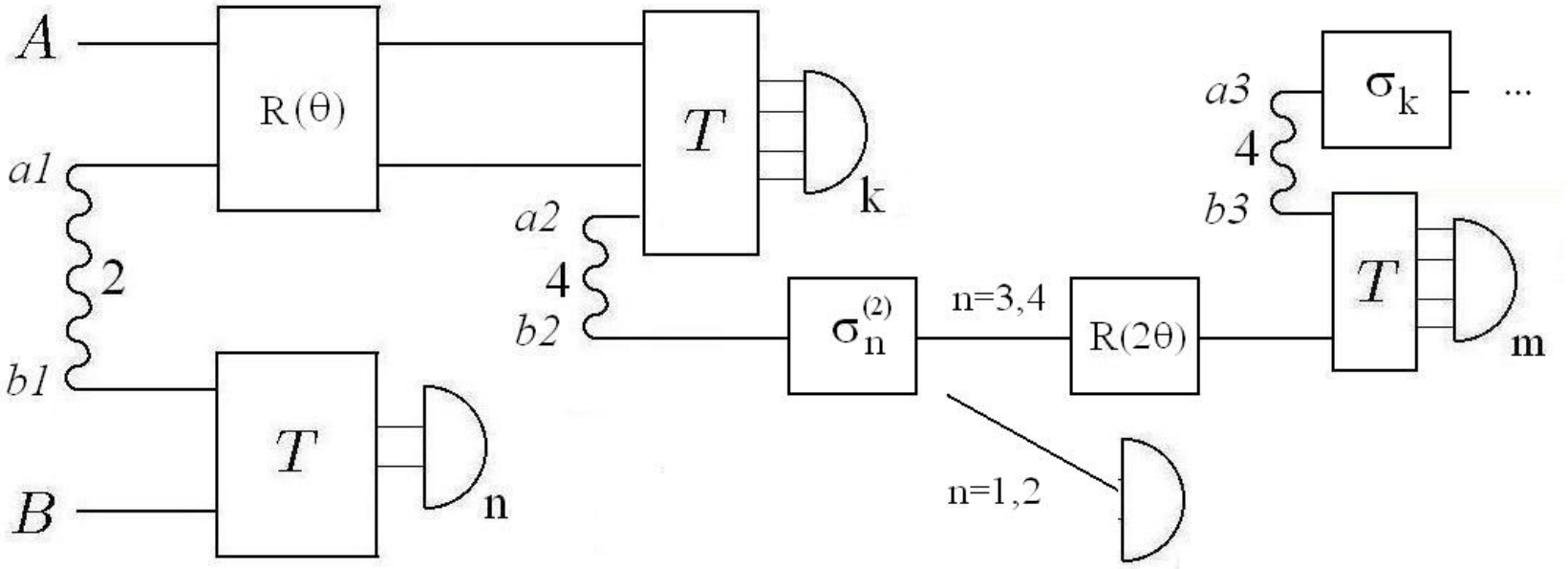

Figure: Instantaneous measurement with $U = R(\theta) = \exp(-i\frac{\theta}{2}\sigma_x \otimes \sigma_x)$. The local unitary corrections (apart from the Pauli operators) are $R(\theta), R(2\theta), R(4\theta), \cdots$.

Finite consumption scheme – more general gates

- Concatenation of rotation chains: the entanglement costs for sequential unitaries do not simply add up, because of the requirement of no-communication .
- Average entanglement consumption for one Pauli rotation chain on 1 qubit: 5 ebits. For 2-4 chains concatenated: 20,59,156 ebits respectively. Entanglement cost grows exponentially with the number of chains.

State verification on two qubits

- The protocol in fact performs an orthogonal nonlocal measurement of an equally entangled basis (can be mapped to the quadratic Gauss sum type).
- For general states on two qubits, needs 6 ebits on average. But needs less entanglement for states with binary angles.

General nonlocal measurements

- The average entanglement cost for the most general two-qubit measurement is 787 ebits.
- Entanglement cost for multi-qubit measurements: U is decomposed into an exponential number of Pauli rotation gates (correspond to rotation chains in the protocol), thus the average entanglement cost is doubly-exponential in the number of qubits.

Relationship to nonlocal unitary protocols

- By teleporting at the end, the finite consumption scheme of nonlocal measurement can be turned into a fast protocol for doing nonlocal unitaries.
- Comparison of entanglement cost of the two approaches for some special unitaries: average and worst cases.

Summary

- Introduced the instantaneous nonlocal measurements.
- Discussed protocols for doing them: The Groisman and Reznik scheme, the Vaidman scheme and the finite consumption scheme.
- Discussed possible relationship to the nonlocal unitaries protocols.